R14, R21, R28, and R35 can be as high as 8.2k. Bigger make the "Q" larger.

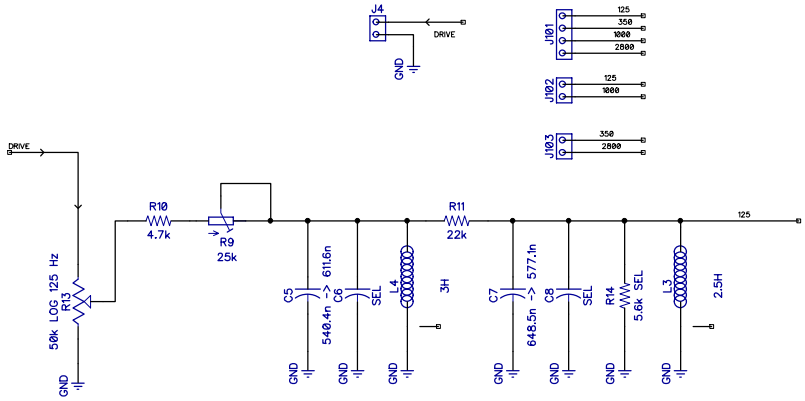

	SIZE	FSCM NO.	DWG NO.	REV
	SCALE		125	

R14, R21, R28, and R35 can be as high as 8.2k. Bigger make the "Q" larger.

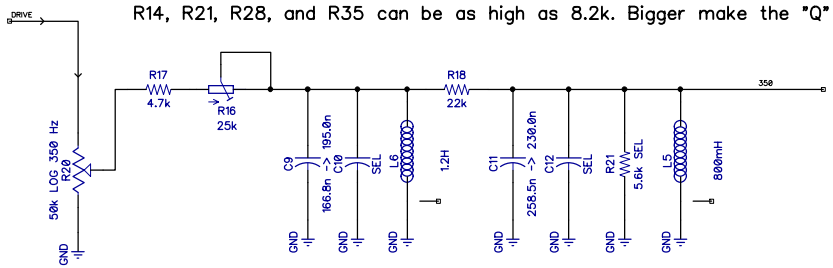

	SIZE	FSCM NO.	DWG NO.	REV
	SCALE		350	

R14, R21, R28, and R35 can be as high as 8.2k. Bigger make the "Q" larger.

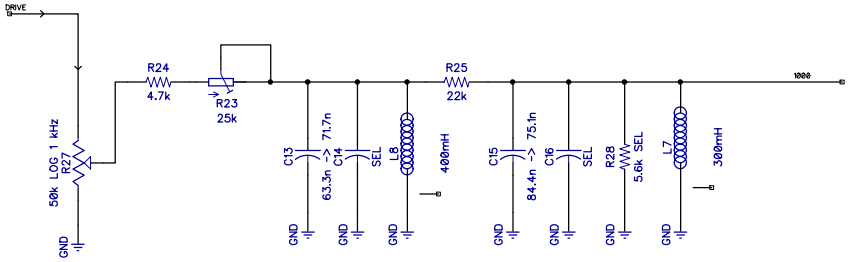

	SIZE	FSCM NO.	DWG NO.	REV
	SCALE		1000	

R14, R21, R28, and R35 can be as high as 8.2k. Bigger make the "Q" larger.

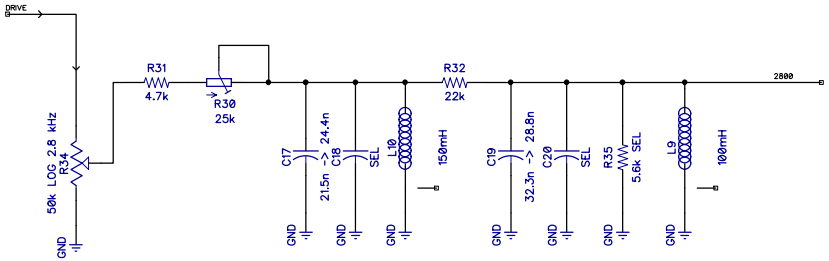

	SIZE	FSCM NO.	DWG NO.	REV
	SCALE		2800	