R14, R21, R28, and R35 can be up to 8.2k if wanted. Bigger increases the "Q" of the second stage.

The combination of C101 and C102, and the combination of C103, and C104 should add up to a capacitance of about 1.2uF. It can be as high as 1.5uF, but above this and the cutoff is pushed too low. You can use a 1.0uF and 0.22uF capacitor for C101/C102 and C103/C104 to make a 1.22uF capacitor.

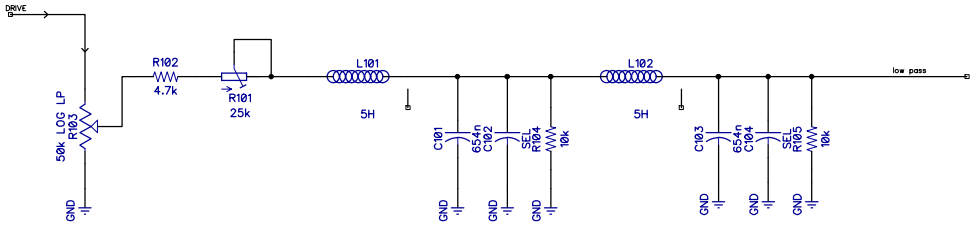

	SIZE	FSCM NO.	DWG NO.	REV
	SCALE		Low pass	

R205, R305, R405, and R505 can be as high as 8.2k. Bigger makes the "Q" larger.

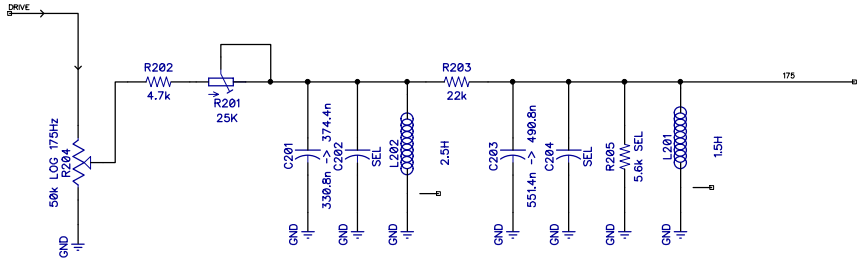

	SIZE	FSCM NO.	DWG NO.	REV
	SCALE		175	

R205, R305, R405, and R505 can be as high as 8.2k. Bigger makes the "Q" larger.

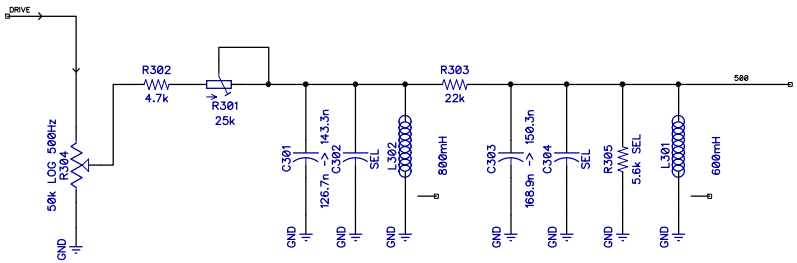

	SIZE	FSCM NO.	DWG NO.	REV
	SCALE		500	

R205, R305, R405, and R505 can be as high as 8.2k. Bigger makes the "Q" larger.

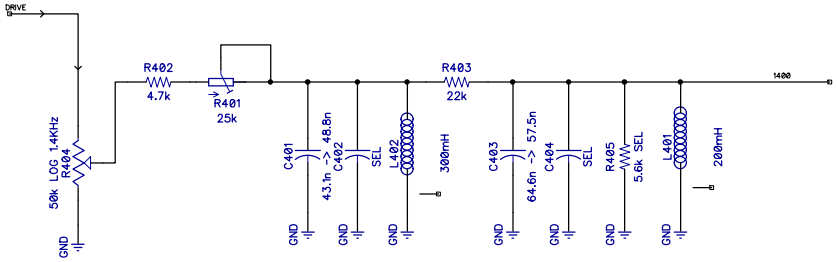

	SIZE	FSCM NO.	DWG NO.	REV
	SCALE		1400	

R205, R305, R405, and R505 can be as high as 8.2k. Bigger makes the "Q" larger.

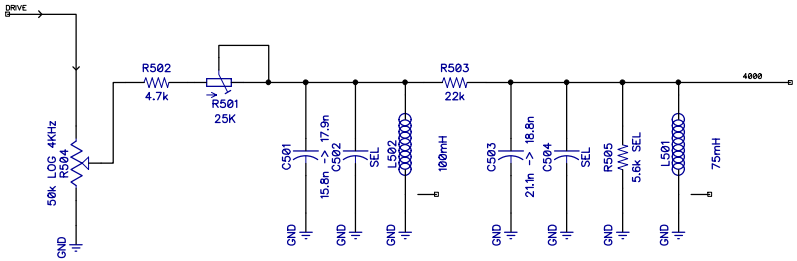

	SIZE	FSCM NO.	DWG NO.	REV
	SCALE		4000	

The combination of C601 and C603, and
the combination of C602, and C604 should add
up to a capacitance of about 2.0nF. It can be
as high as 2.2nF, but above this and the cutoff
is pushed too low. Lower and the cutoff is too high.
You can use two 1.0nF capacitors for C601/C602
and C603/C604 to make a 2.0nF capacitor.

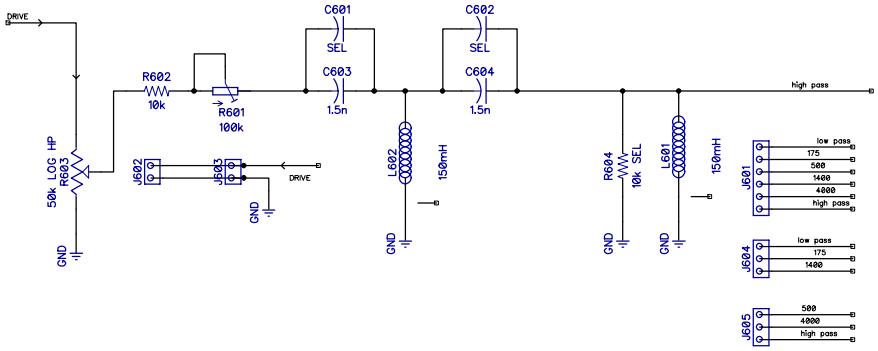

	SIZE	FSCM NO.	DWG NO.	REV
	SCALE		High Pass	